

Hallam

19 inch Rack Cabinets

Setting new standards in outstanding design and superior quality manufacturing are just two of the main goals which Hallam Manufacturing build into all their products.

Through research,development and client interaction, Hallam Manufacturing produces high quality 19" rack cabinets and accessories to meet customer's current and future requirements.



Telecommunications carriers, international electronics companies, government, military, computer companies, laboratories, banks, radio and television stations specify Hallam cabinets for secure, accessible and organised housing of their valuable equipment.

Hallam cabinets offer superb appearance to enhance any installation.



Hallam
MANUFACTURING PTY. LTD.

19" Rack Description

1 Frame

The fully welded construction of the frame ensures that the rack will be stable under load conditions. There will be no flexing of the rack in any of the diagonal planes. The unique design of the posts departs from traditional “Box Style” designs, giving the cabinet an overall “Hitech” appearance in any installation site. The design of the post also allows for the vertical power strip to be incorporated into the cabinet. Removable cover plates in the base section of the frame allow for cable entry into the rack when through floor entry is not available. This cable entry still allows for the doors to open and close without any interference with the cables.

***Material:** 2.0mm Zinc Coated Steel*
***Finish** Powdercoat-Ripple*

2A Top Panel (plain)

The plain top panel provides protection for mounted equipment from the egress of objects into the rack. The top panel is supplied mounted to the frame on spacers which provides for air ventilation through the top of the rack. Screw mounting through the top of the panel allows easy access into the frame during installation and maintenance activities. These mounting screws can also be reversed to the inside of the frame for added security. Cable entry holes can be provided in the top panel, locations and sizes to be specified at time of ordering. The top panel can also be mounted flush to the frame providing additional protection against foreign objects.

***Material:** 1.0mm Zinc Coated Steel*
***Finish:** Powdercoat-Ripple*

2B Top Panel (vented)

The vented top panel provides additional open area for ventilation when fan trays are installed or heat dissipation within the cabinet is a requirement. The same mounting and access options as the plain top panel are available with the vented panel.

***Material:** 1.0mm Zinc Coated Steel*
***Finish:** Powdercoat-Ripple*

3A Side Panels

Fitted to the side panels are flush grip handles and ball stud catches which allows for easy pull and lift off access. Side panels can be ventilated with either louvre or perforations, the same as those on the metal doors. Cable entry cutouts can be provided, location and size to be specified at time of ordering.

***Material:** 1.0mm Zinc Coated Steel*
***Finish:** Powdercoat Ripple*

3B Side Panels (lockable)

For added security and limited access, side panels can fitted with keyed cam locks. These locks can be fitted the same as the door locks and for added security situations, SEC approved locks can also be fitted with a master keying system if desired. Removal of the side panels can be achieved once the locks have been released. The ventilation options also apply if required.

***Material:** 1.0mm Zinc Coated Steel*
***Finish:** Powdercoat Ripple*

3C Side Panels (secured)

The use of an internal bracket fastened to the inside of side panels also provides added security to the cabinet. Removal of the side panel can only be achieved by the releasing of the internal screws on the securing bracket. Ventilation options also apply as required.

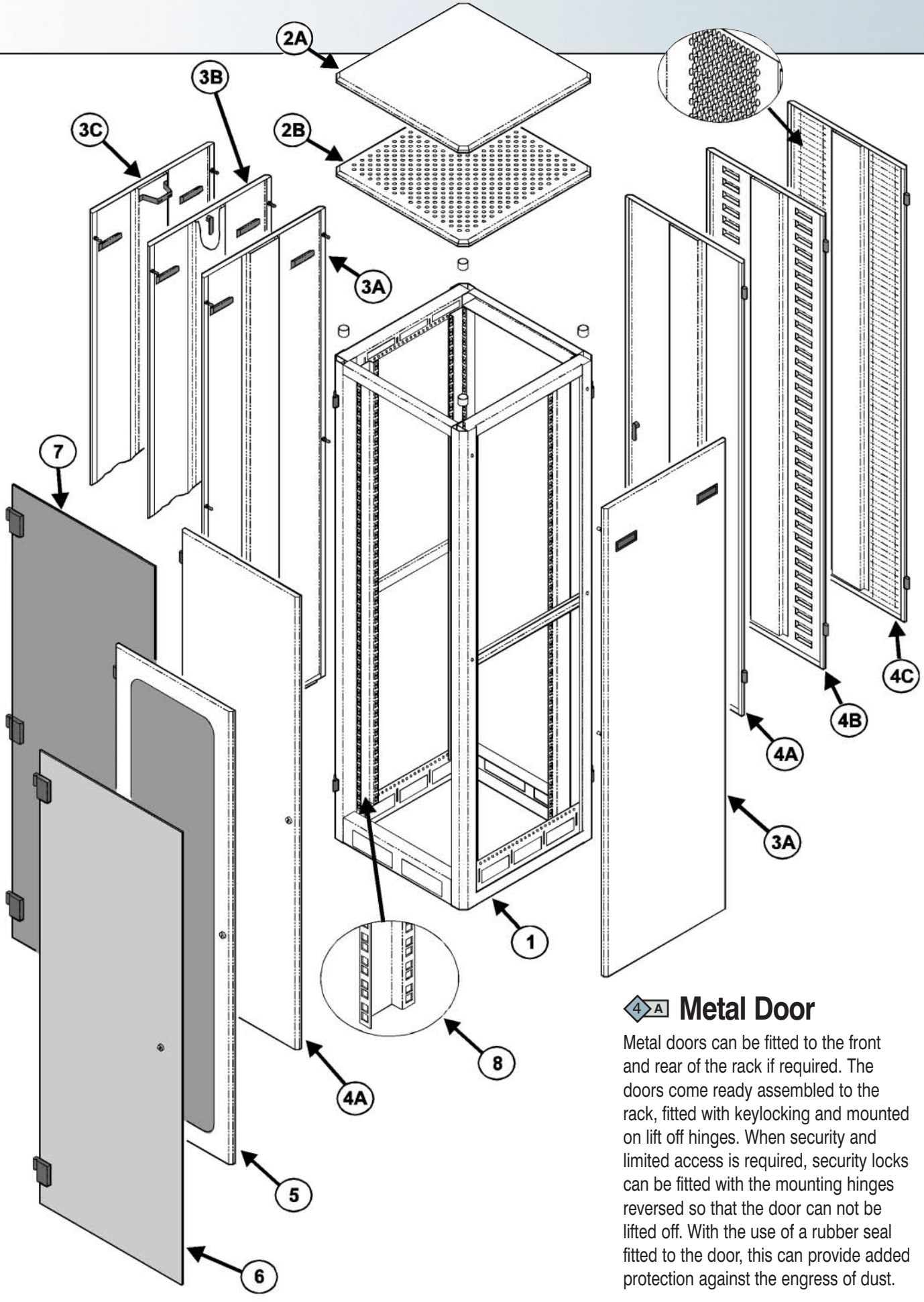

4A Metal Door

Metal doors can be fitted to the front and rear of the rack if required. The doors come ready assembled to the rack, fitted with keylocking and mounted on lift off hinges. When security and limited access is required, security locks can be fitted with the mounting hinges reversed so that the door can not be lifted off. With the use of a rubber seal fitted to the door, this can provide added protection against the engress of dust.

Material: ***1.0mm Zinc Coated Steel***
Finish: ***Powdercoat Ripple***

Component View Of The 19" Rack System

4B Metal Door (louvre vented)

Additional air flow through the cabinet can be achieved when the door panel is pre-punched with louvre vents. These vents can be punched over the complete height of the door or specific areas only. The various locking and sealing options are also available with this door.

Material: *1.0mm Zinc Coated Steel*
Finish: *Powdercoat Ripple*

4C Metal Door (ventilated)

Additional air flow through the cabinet can be achieved when the door panel is pre-punched with perforation vents.

These vents can be punched over the complete height of the door or specific areas only. Protection against dust can be achieved when a removable filter panel is fitted. The various locking and sealing options are also available with this door.

Material: *1.00mm Zinc Coated Steel*
Finish: *Powdercoat Ripple*

5 Perspex Door

This perspex door is of the same construction as the metal door, with the centre area punched out and fitted with a perspex panel. This perspex panel allows for viewing of both the equipment inside the cabinet and functions that are being performed. This style of door is suited to installations where limited access is required or protection against excessive dust is needed.

Material: *1.0mm Zinc Coated Steel*
4.5mm Tinted Perspex
Finish: *Powdercoat Ripple*

6 Glass Door

Frameless tinted safety glass provides a unique option to the Hallam Cabinet Range. The glass door can be fitted to the front or rear of the cabinet and provides an unobstructed view of the equipment inside the cabinet. The glass door is an obvious choice if static electricity can cause interference with the equipment. The new improved lift off hinges are fitted as standard.

Material: *6.0mm Toughened Safety Glass*
Finish: *Grey Tint*

7 Perspex Door (frameless)

Frameless tinted perspex provides an alternative and unique option to the Hallam Cabinet Range.

The perspex door can be fitted to the front or rear of the cabinet and provides an unobstructed view of the equipment inside. The new improved lift off hinges are fitted as standard.

Material: *8.0mm Tinted Perspex*

8 Panel Mounting Members

This part of the frame structure provides the 19 inch mounting as specified by the standards. These mounting members have the caged nut holes pre-punched along the RU height of the rack. Four panel mounting members per rack are supplied and their design eliminates the need to have additional “Shelf Rails”.

Material: *2.0mm Steel*
Finish: *Black Zinc Electroplating*

Specifications

Design criterea to International Standard IEC 297

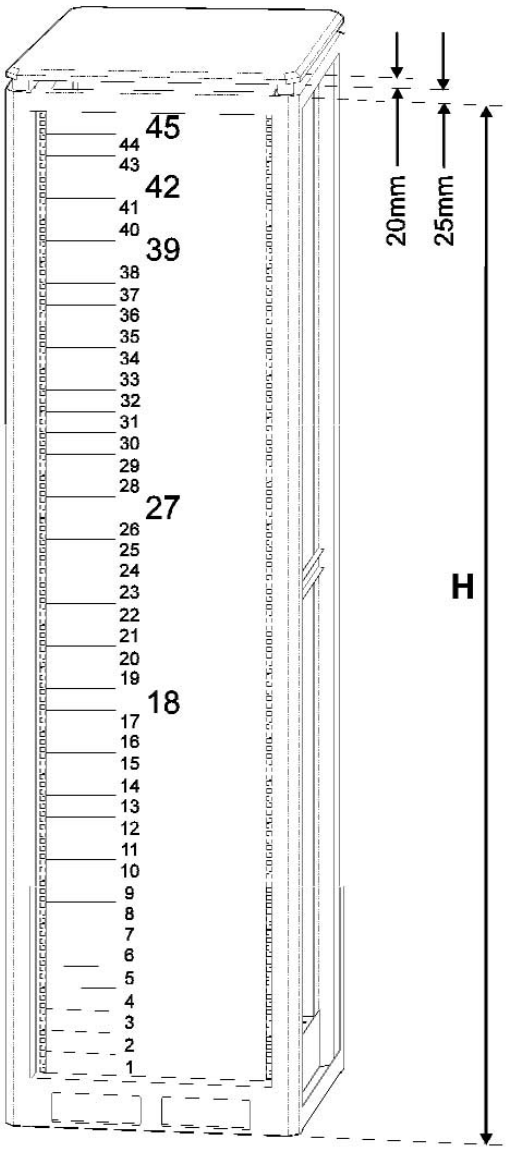

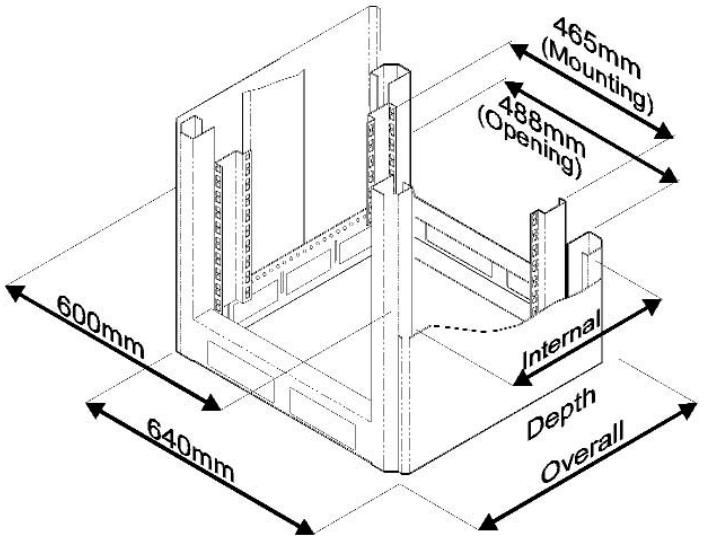

MODEL Number	Rack Unit	Height H	Depth Overall	Depth Internal
RC 18 60 60	18	941.34mm	600.0mm	480.0mm
RC 18 80 60	18	941.34mm	800.0mm	680.0mm
RC 18 90 60	18	941.34mm	900.0mm	780.0mm
RC 18 100 60	18	941.34mm	1000.0mm	880.0mm
RC 27 60 60	27	1342.0mm	600.0mm	480.0mm
RC 27 80 60	27	1342.0mm	800.0mm	680.0mm
RC 27 90 60	27	1342.0mm	900.0mm	780.0mm
RC 27 100 60	27	1342.0mm	1000.0mm	880.0mm
RC 39 60 60	39	1875.0mm	600.0mm	480.0mm
RC 39 80 60	39	1875.0mm	800.0mm	680.0mm
RC 39 90 60	39	1875.0mm	900.0mm	780.0mm
RC 39 100 60	39	1875.0mm	1000.0mm	880.0mm
RC 42 60 60	42	2009.0mm	600.0mm	480.0mm
RC 42 80 60	42	2009.0mm	800.0mm	680.0mm
RC 42 90 60	42	2009.0mm	900.0mm	780.0mm
RC 42 100 60	42	2009.0mm	1000.0mm	880.0mm
RC 45 60 60	45	2142.3mm	600.0mm	480.0mm
RC 45 80 60	45	2142,3mm	800.0mm	680.0mm
RC 45 90 60	45	2142.3mm	900.0mm	780.0mm
RC 45 100 60	45	2142.3mm	1000.0mm	880.0mm



Features

At Hallam Manufacturing we have created the ideal rack cabinet system to suit your every need. Coupled with our wide range of accessories and options, these cabinets offer outstanding features such as:

- ☐ **Fully welded frame construction**
- ☐ **Extreme strength & rigidity under load conditions**
- ☐ **Aesthetic modern design**
- ☐ **Integrated power distribution**
- ☐ **Lift off side panels with spring latch fastening**
- ☐ **Cable entry in base through removable covers**
- ☐ **Superior cable management**
- ☐ **Door options: Metal, Glass or Perspex**



Authorised Distributor

Hallam
MANUFACTURING PTY. LTD.

INTERNATIONAL QUALITY MANAGEMENT SYSTEM
ISO 9002 NATA CERTIFIED